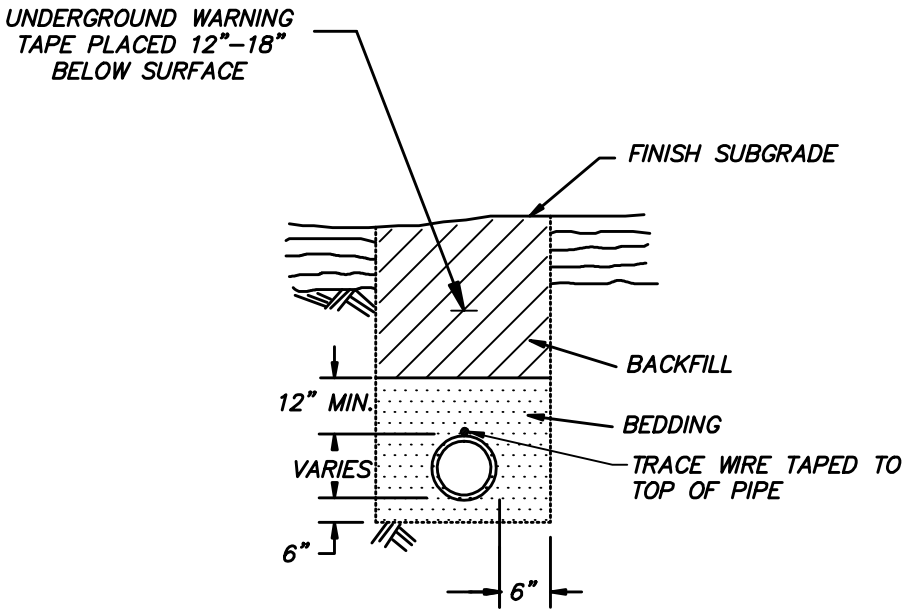

DUCTILE IRON PIPE, PVC, PE & HDPE PIPE

NOTES:

1. WATER DENSIFIED BACKFILL AND TUNNELING SHALL NOT BE ALLOWED.
2. BACKFILL SHALL MEET THE REQUIREMENTS FOR CLASS "E" BACKFILL WITH NO ROCKS SIZED OVER 4", COMPACTED IN 6" (MAX.) LIFTS TO 90% (MIN.) RELATIVE COMPACTION.
3. BEDDING MATERIAL FOR THE FOLLOWING PIPE SHALL MEET THE REQUIREMENTS OF SECTION 200 & 305 OF THE LATEST EDITION OF THE STANDARD SPECIFICATIONS FOR PUBLIC WORKS CONSTRUCTION AND COMPACTED TO A MINIMUM 90% RELATIVE COMPACTION.
   A) DUCTILE IRON PIPE – CLASS "C"
   B) ALL OTHER PIPE – CLASS "A"
4. FOR TRENCHES & EXCAVATIONS LOCATED WITHIN ROADWAY SECTION, SEE PAVEMENT PATCH DETAIL.
5. ALL TRENCHES AND EXCAVATIONS SHALL CONFORM TO THE LATEST EDITION OF O.S.H.A. AND M.U.T.C.D. REQUIREMENTS.
6. NATIVE MATERIAL MUST BE APPROVED BY THE CITY OF ELKO ENGINEER PRIOR TO USING AS BACKFILL OR BEDDING.
7. UNDERGROUND WARNING TAPE SHALL BE METALLIC AND APPROPRIATLY LABELED AND COLORED.

NO.	REVISION	DATE	STANDARD DETAILS FOR PUBLIC WORKS CONSTRUCTION	SECTION UTILITIES	
			TRENCH EXCAVATION & BACKFILL	DRAWING NO. U–2.1	
			CITY OF ELKO, NEVADA	DATE 11/30/07	PAGE 1

U:\ELKO STD DRAWINGS\U-2.1.dwg